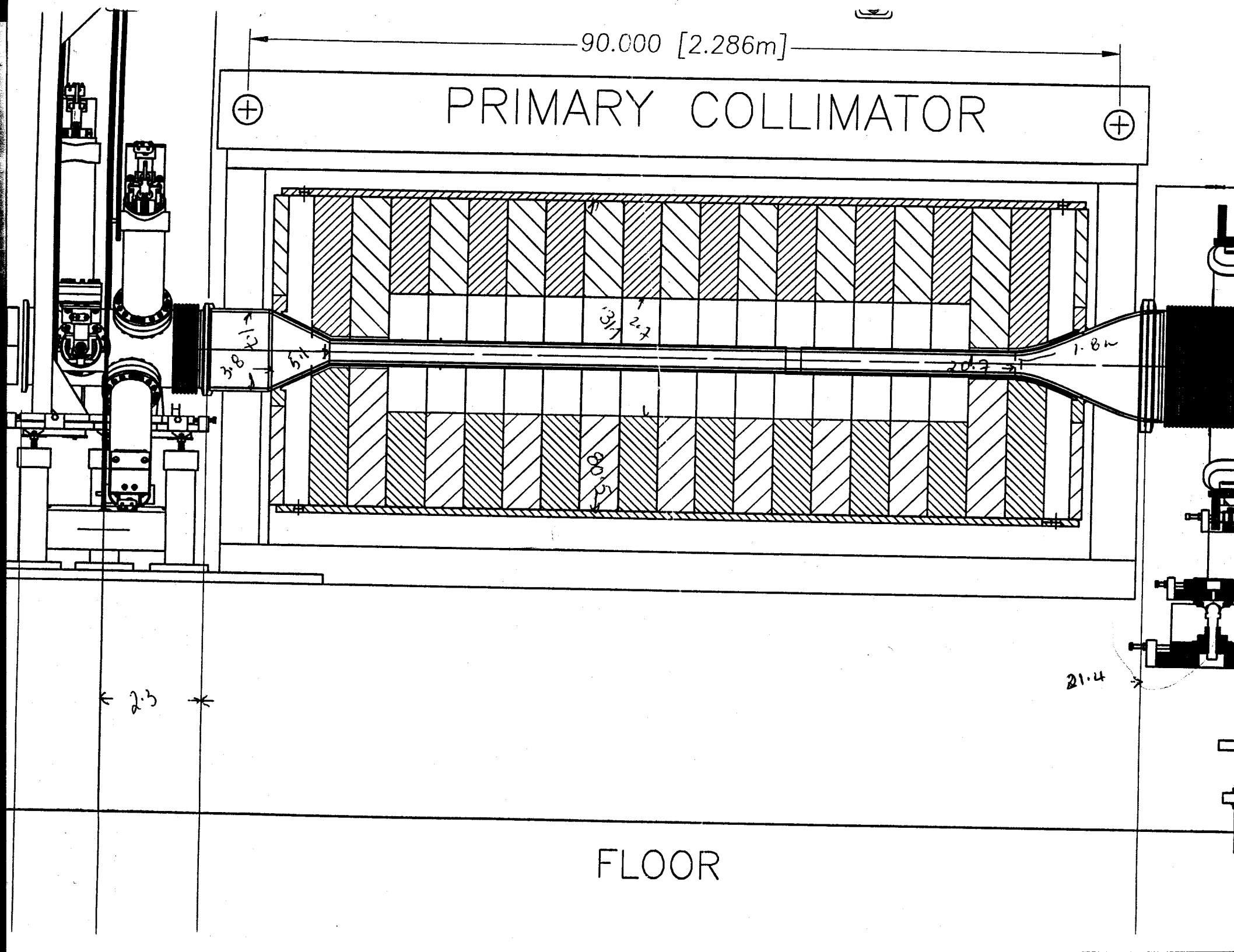
90.000 [2.286m]
PRIMARY COLLIMATOR
1.7
3.8
5.1
31.7
24.7
20.7
1.8m
80.5
21.4
2.3
FLOOR

Date: Wed, 12 Feb 2003 15:04:05 -0500
From: cp3 <cp3@ornl.gov>
Subject: RE: Primary collimator aperture question
Sender: cp3 <cp3@ornl.gov>
To: "Lee, Yong Y" <yylee@bnl.gov>, cp3 <scousine@ornl.gov>,
Hans Ludewig <ludewig@necs01.dne.bnl.gov>,
scousine <scousine@ornl.gov>
Cc: "McGahern, William J" <wmcgahern@bnl.gov>,
"Raparia, Deepak" <raparia@bnl.gov>, "Simos, Nikolaos" <simos@bnl.gov>,
"Tuozzolo, Joseph E" <tuozzolo@bnl.gov>, "Wei, Jie" <jwei@bnl.gov>,
shenderson <shenderson@ornl.gov>
X-Webmail-Userid: cp3@ornl.gov
X-Exp32-Serialno: 00002172
X-Mailscanner: Found to be clean

P.S. Please let me know what you decide so that I can begin
getting some finalized loss distributions for ASAC. Thanks, Sarah.

>===== Original Message From "Lee, Yong Y" <yylee@bnl.gov> =====
>I think if the efficiency drops by say a fraction of a % then we should save
>money, but if it is couple of % then the money well spent.
>YYL
>
>-----Original Message-----
>From: cp3 [mailto:cp3@ornl.gov]
>Sent: Thursday, February 06, 2003 11:53 AM
>To: Hans Ludewig; scousine
>Cc: Wei, Jie; Raparia, Deepak; shenderson@ornl.gov; Simos, Nikolaos;
>Tuozzolo, Joseph E; McGahern, William J; Lee, Yong Y
>Subject: RE: Primary collimator aperture question
>
>
>Hi Hans,
>
>Sorry I was a few days in getting back to you, I was on travel
>until today.
>
>The problem with choosing a compromise aperture for both collimators
>is that the horizontal beam size grows substantially over the length
>of the collimators. Choosing a value of 75 mm for x/2, for instance,
>would leave the acceptance at the end of the collimator somewhere
>around the mid-two-hundreds, which is too close to the good beam
>emittance. However, it might be possible to go with the largest
>aperture for the whole length, something around 78 or 80 mm. This
>means that the acceptance of the collimator would not reach the 300 pi
>value until the very end, though. I seem to recall doing some
>simulations for this case before, and finding a decrease in the
>collimation efficiency, though I can't recall exactly how much.
>
>If you can wait a couple of days, I will do some simulations to
>assess the impact of going to a larger (78-80mm for x/2), constant
>aperture design.
>
>Sarah
>
>
>>===== Original Message From Hans Ludewig <ludewig@necs01.dne.bnl.gov> =====
>>Sarah - We are starting to prepare the drawings for the primary collimator,
>>and are using your aperture dimensions:
>>
>> x/2 = 73 mm, y/2 = 48 mm, l = 1.2 m
>> x/2 = 80 mm, y/2 = 48 mm, l = 0.6 m
>>
>>This two-stage arrangement is bound to add to the manufacturing costs. In
>>view of this potential cost increase it would be worth while to explore

New
x/2 = 79 mm.
y/2 = 48 mm.

old

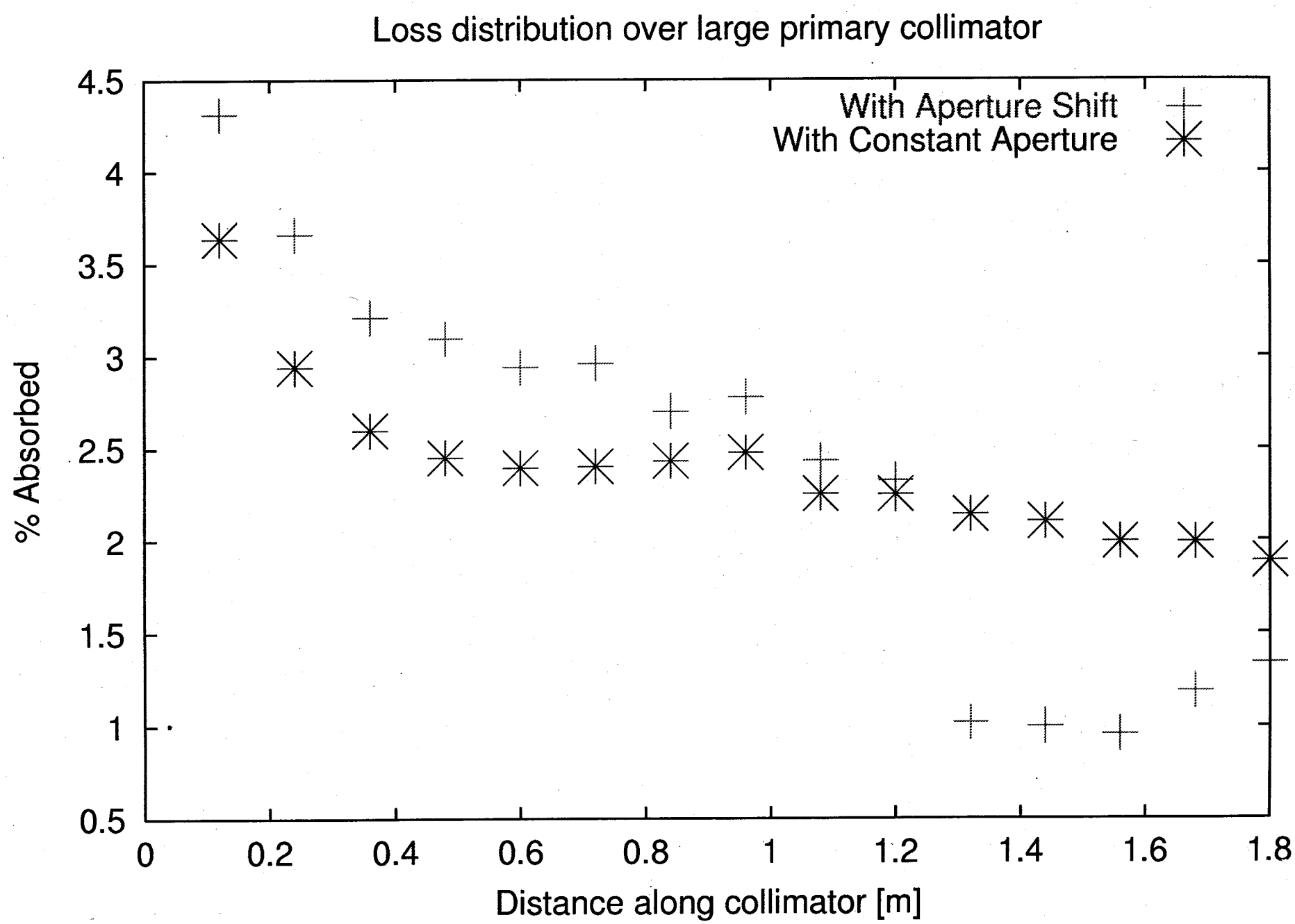
Loss distribution over large primary collimator
With Aperture Shift
With Constant Aperture
% Absorbed
Distance along collimator [m]
4.5
4
3.5
3
2.5
2
1.5
1
0.5
0
0.2
0.4
0.6
0.8
1
1.2
1.4
1.6
1.8

02/24/** 10:46:19
COLLIMATION STRAIGHT SECTION IN
RING - 248 M RING (1.3 GeV
COMPATIBLE)
probid = 02/24/** 10:44:55
basis:
(1.000000, .000000, .000000)
(.000000, .000000, 1.000000)
origin:
(.00, .00, 200.00)
extent = (200.00, 200.00)

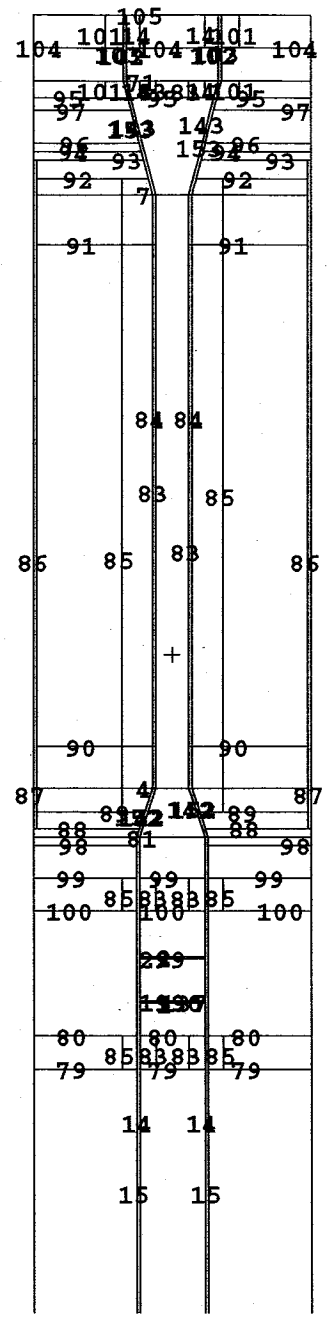

02/20/** 14:46:52
COLLIMATION STRAIGHT SECTION IN
RING - 248 M RING (1.3 GeV
COMPATIBLE)
probid = 02/20/** 14:45:17
basis:
(1.000000, .000000, .000000)
(.000000, .000000, 1.000000)
origin:
(.00, .00, 375.00)
extent = (50.00, 50.00)
cell labels are
cell names

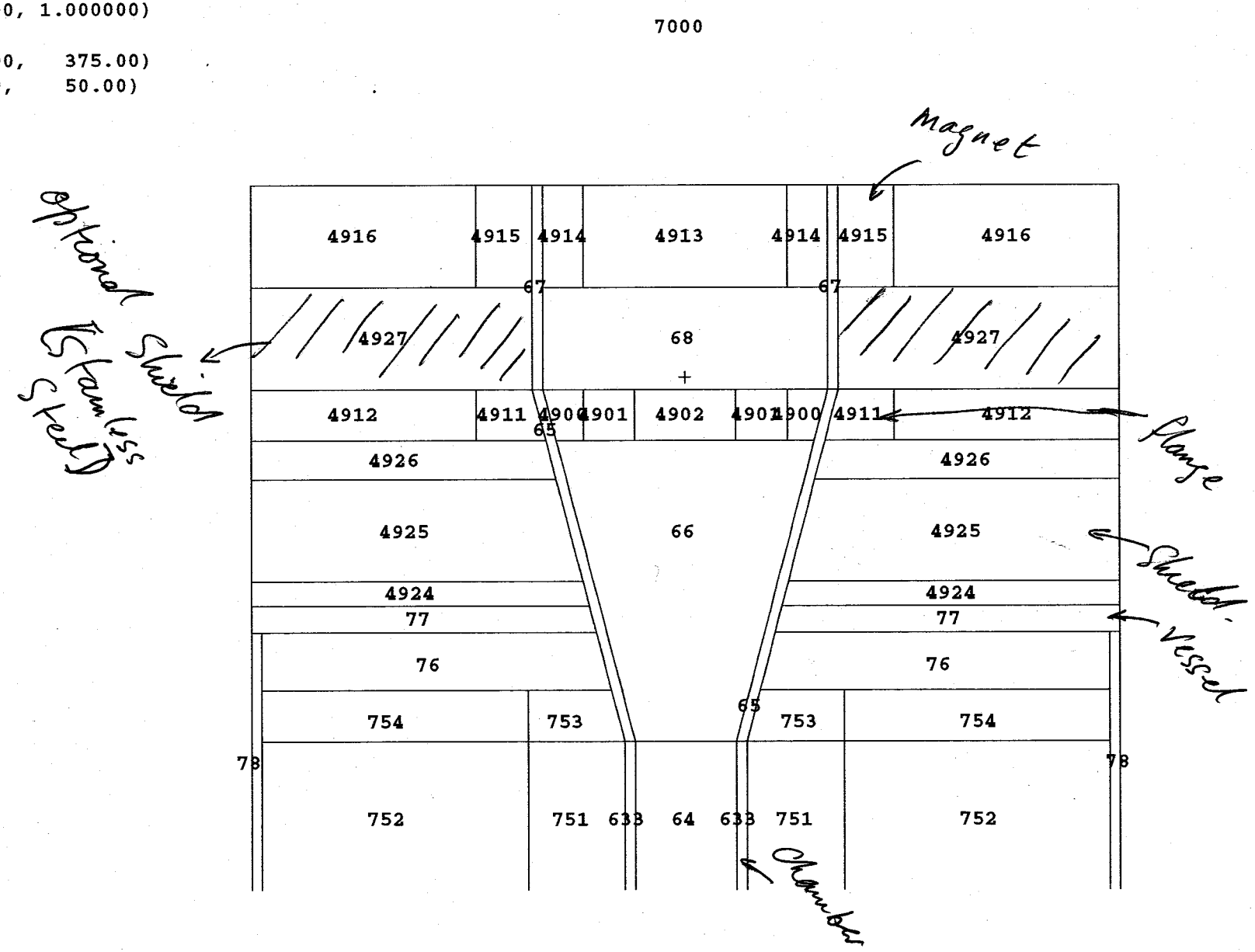

02/20/** 14:47:07
COLLIMATION STRAIGHT SECTION IN
RING - 248 M RING (1.3 GeV
COMPATIBLE)
probid = 02/20/** 14:45:17
basis:
(1.000000, .000000, .000000)
(.000000, .000000, 1.000000)
origin:
(.00, .00, 100.00)
extent = (50.00, 50.00)
cell labels are
cell names

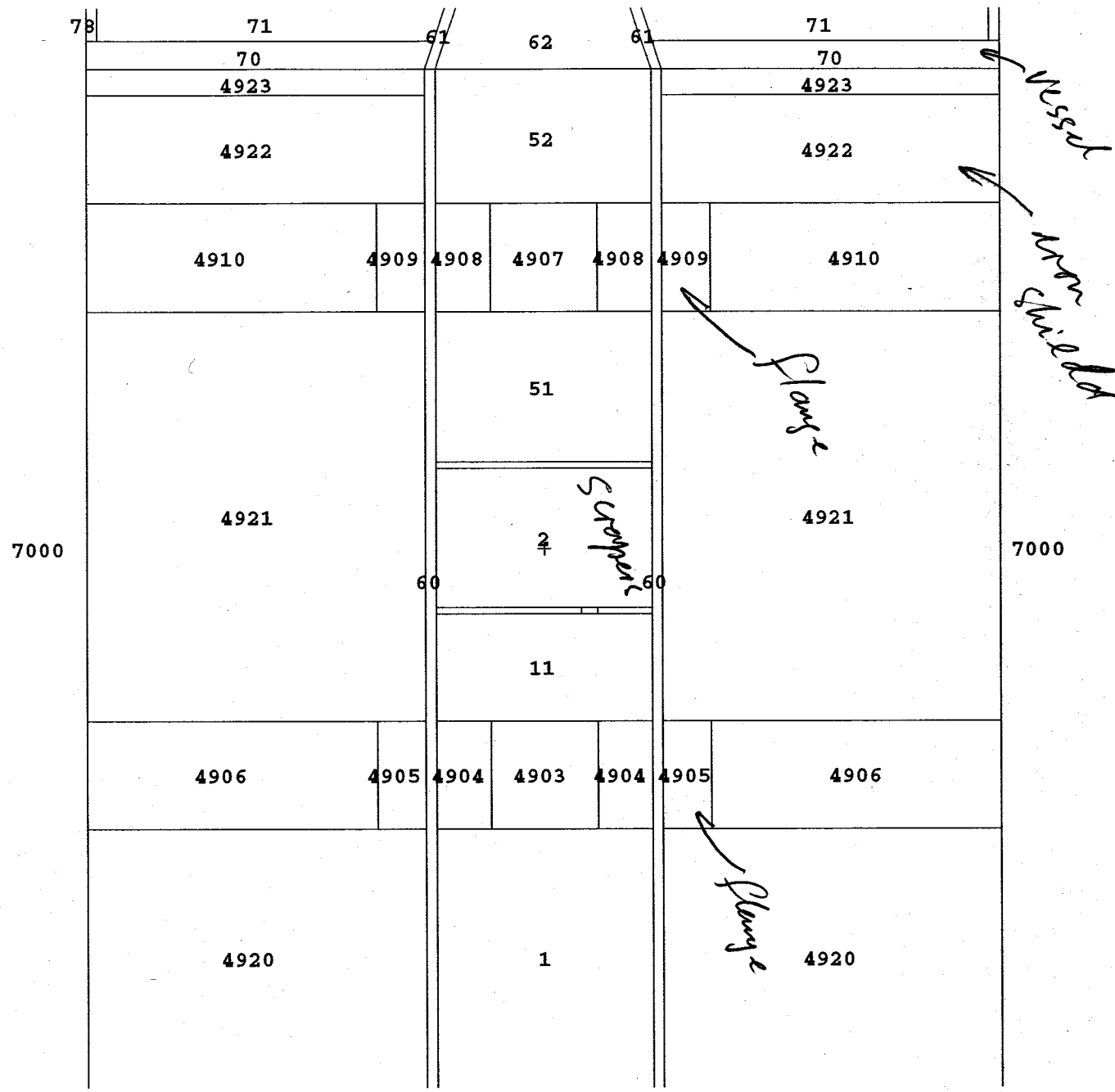

02/13/** 16:14:15
Primary collimator tube

probid = 02/13/** 16:13:37
basis:
(1.000000, .000000, .000000)
(.000000, 1.000000, .000000)
origin:
(.00, .00, .50)
extent = (20.00, 20.00)

Stainless Steel Shield

Particle Bed

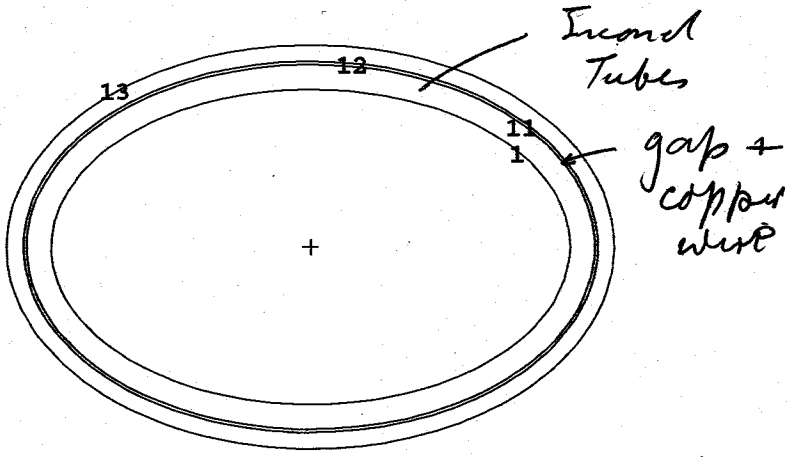

Primary Collimator Dose Estimate $\left(\frac{n-o}{o}\right) 100\%$

New no shield

Coll #	n°	γ	p+	Total	Dose* rad/s	%
4900	1.1(-5)	3.0(-6)	7.8(-5)	9.21(-5)	18.11	+49
4904	2.2(-7)	6.5(-8)	3.5(-7)	6.35(-7)	0.12	-55
up- 4905*	6.7(-8)	2.1(-8)	5.2(-9)	9.32(-8)	0.02	-66
flange 4908	–	–	~~2.7(-8)~~			
4909*	2.6(-7)	9.1(-8)	2.7(-8)	3.78(-7)	0.08	-70
flange 4911*	5.7(-6)	1.5(-6)	1.2(-5)	1.92(-5)	3.78	+36
4913	7.0(-5)	9.4(-6)	8.5(-3)	8.58(-3)	1689	+9.0
4914	1.5(-5)	3.7(-6)	1.9(-4)	2.09(-4)	41.1	+19
4915* (magnet)	5.9(-6)	1.6(-6)	3.0(-5)	3.75(-5)	7.38	+28

Old no shield

4900	8.4(-6)	2.3(-6)	5.4(-5)	6.47(-5)	12.11
4904	5.8(-7)	1.7(-7)	6.2(-7)	1.36(-6)	0.27
4905*	1.9(-7)	6.1(-8)	4.4(-8)	2.95(-7)	0.06
4908	–	–	–	–	
4909*	9.4(-7)	3.0(-7)	1.2(-7)	1.36(-6)	0.27
4911*	4.3(-6)	1.2(-6)	8.4(-6)	1.39(-5)	2.74
4913	6.5(-5)	8.6(-6)	7.8(-3)	7.87(-3)	1549
4914	1.3(-5)	3.2(-6)	1.6(-4)	1.76(-4)	34.6
4915* (magnet)	5.0(-6)	1.3(-6)	2.3(-5)	2.93(-5)	5.77

* pt loss = 1.23 (13) p^+/s.

Conversion factor = MeV/gm p^+ × 1.6(-8) → rad/p^+

Assume 200 days/yr ⇒ 1.73(7) s

	New	Old	
4915	1.3(8) rad/yr	1.0(8) rad/yr	(no shield)

Sutherland Kapton life 2×10^7 Gy ⇒ 2×10^9 rads

4915 (kp)	15 yrs	20 yrs.

With Shield. - New distribution.

Cell #	n°	γ	p+	Total	rad/s
4900	1.23(-5)	3.78(-6)	7.59(-5)	9.18(-5)	18.1
4904	1.62(-7)	5.34(-8)	2.82(-7)	4.97(-7)	0.1
4905*	3.39(-8)	1.41(-8)	9.08(-9)	5.71(-8)	0.01
4908	7.47(-7)	3.18(-7)	9.73(-7)	2.04(-6)	0.4
4909*	2.37(-7)	1.31(-7)	5.29(-8)	4.21(-7)	0.08
4911*	6.91(-6)	2.15(-6)	1.16(-5)	2.07(-5)	4.1
4913	7.11(-5)	9.92(-6)	8.53(-3)	8.61(-3)	1694
4914	1.61(-5)	4.26(-6)	1.86(-4)	2.06(-4)	40.5
4915* (magnet)	6.48(-6)	1.93(-6)	2.74(-5)	3.58(-5)	7.0

- Cost estimate of 2-stage Tube -

Single circular tube ~ \$92,000

Estimated increase for elliptical tube ~ \$10,000

Above values based on SDMS estimates.

Estimate for single elliptical tube ~ \$102,000.

Two-stage tube consists of "2-tubes" plus more complex transition pieces. (ellipse-to-circle, and ellipse-to-ellipse

Estimated cost for two stage tube

$(2 \times 102{,}000) + \sim 25{,}000$

$\Rightarrow$ \$205,000 — \$230,000