MPS – Installation, Commissioning, Operations

- Topics
  1) MPS Systems
  2) Defense in Depth
  3) Hardware Setup
  4) Software Setup
  5) EPICS Screens
  6) EPICS Database
  7) EPICS SNL
  8) Run Permit System (Mostly timing but..)

Critical survivability time for accelerator devices (Full Power) (Acc Physics Group)

- MEBT, DTL: 10 us - (Cu heat load at 2.5 MeV)
- CCL: ~60 us
- SCL: ~110 us
- HEBT/Ring/RTBT: 16 ms
- Collimator: 2 full pulses
- Stainless steel vacuum chamber: more than 2 pulses
- Diagnostics ceramic insulator: more than 2 pulses
- Injection kicker ceramic chamber: 2 pulses
- RF ceramic insulator: 2 pulses
- Extraction kicker ferrite: about 1 pulse
- Flange & sealing:, TiN coating ?

Target Specifications

Table III-1 2-MW Beam interface requirements with the target shroud face

	Normal condition	Off-normal	Duration of fault
Target cross section width height	404 mm 104 mm		
Beam spot width height	200 mm 70 mm		
Beam power within nominal beam spot[3]	$\geq$ 90 %	> 50% power outside spot	$\leq$ 2 pulses
Time-average beam current density over spot	$\leq$ 0.143 A/m^2		
Peak time-average beam current density [1,2]	$\leq$0.25 A/m^2	$\leq$0.28 A/m^2	10 seconds
Peak single pulse density[4]	$\leq$ 2.6 x 10^{16} protons/m^2	$\leq$ 3.20 x 10^{16} protons/m^2	$\leq$ 2 pulses
Tolerance on beam centroid			

MPS Systems

- High QA System – Protects windows, dumps, target
  - » PLC Based, Response less than 2 Beam Pulses
  - » Inputs, Current comparators, HARPS, Dump/TGT Controls
- Fast Protect Latched – Latches Beam Off 20 µsec
  - » Used when Device/System fault WILL cause beam Loss
  - » Inputs typically not maskable (SW), Vacuum, Valves, Power Supplies, (RF?), Kickers, etc. (Operations will define)
  - » SW maskable inputs, Wire scanners, some corrector supplies
- Fast Protect Auto Reset – Aborts beam for remainder of Macropulse
  - » Shuts off Beam in < 20 µsec, Resets next Cycle_Start event
  - » Inputs typically maskable, Beam Loss Monitors, LLRF?
- Run Permit – Software
  - » MPS Hardware configuration verification
  - » Machine Mode Changes, System verification

Defense in Depth – Lowers Risk

- For Example, TPS and PPS take credit for MPS even though MPS is NOT a safety system.
- MPS HQA uses FPS-Latched for redundancy
- MPS Systems in Parallel
  - » Failure of ALL systems results in System Failure
  - » $Q_{UNReliability} = Q_{FPL} \times Q_{FPAR} \times Q_{HQA} \times Q_{RPS}$
  - » $R_{eliability} = 1 - Q_{UNReliability}$
- Detection – Likelihood of adequate defense before harm is done
  - » (estimate, BLM = 80% reliable, PS Fault detection 95%)
  - » Overall Reliability = 1 – (0.2 * 0.05) = **99%**
- Device Time Response - PS's are Latched, BLM's are Auto Reset
  - » If T_{trip} > 32 msec, No credit can be taken for Latched system in regards to 2 Pulse Limit, $Q_{UNReliability}$=1
  - » FPAR system (BLM's) are Challenged every PS trip

Fast Protect Inputs (List not up to date)

- Work in progress to extract and build database, files from Oracle.
- DB entry indicates if device (or equipment if group of devices) is an MPS input.

	Fast Protect Latched Inputs										Fast Protect Auto reset				
	RF	PS	I	Wire	Harp	Loss	Kick	Dumps	Vac	Total	BPM	Loss	LLRF	Tor.	Total
			Mon.	Scan.				Targets							
LEBT	1	1							1	3					
MEBT	2	17							1	20				2	2
RFQ	1	0	1	1	1				1	5			1	1	2
DTL	6	0	1	6	2				1	16		12	6	2	20
CCL	4	73		8					1	86		24	4	2	30
SRF	92	58	1	29				1	1	182	2	58	92		152
HEBT	2	54	1	14	2	2			2	77		39	2		41
RING	4	66	1			2	8	1	2	84	2	96	4	2	104
RTBT		55	2	4	2	4	14	2	2	85	4	48		4	56
Total	112	324	7	62	7	8	22	4	12	558	8	277	109	13	407

MPS Fast Protect System Layout (FPAR + FPL)

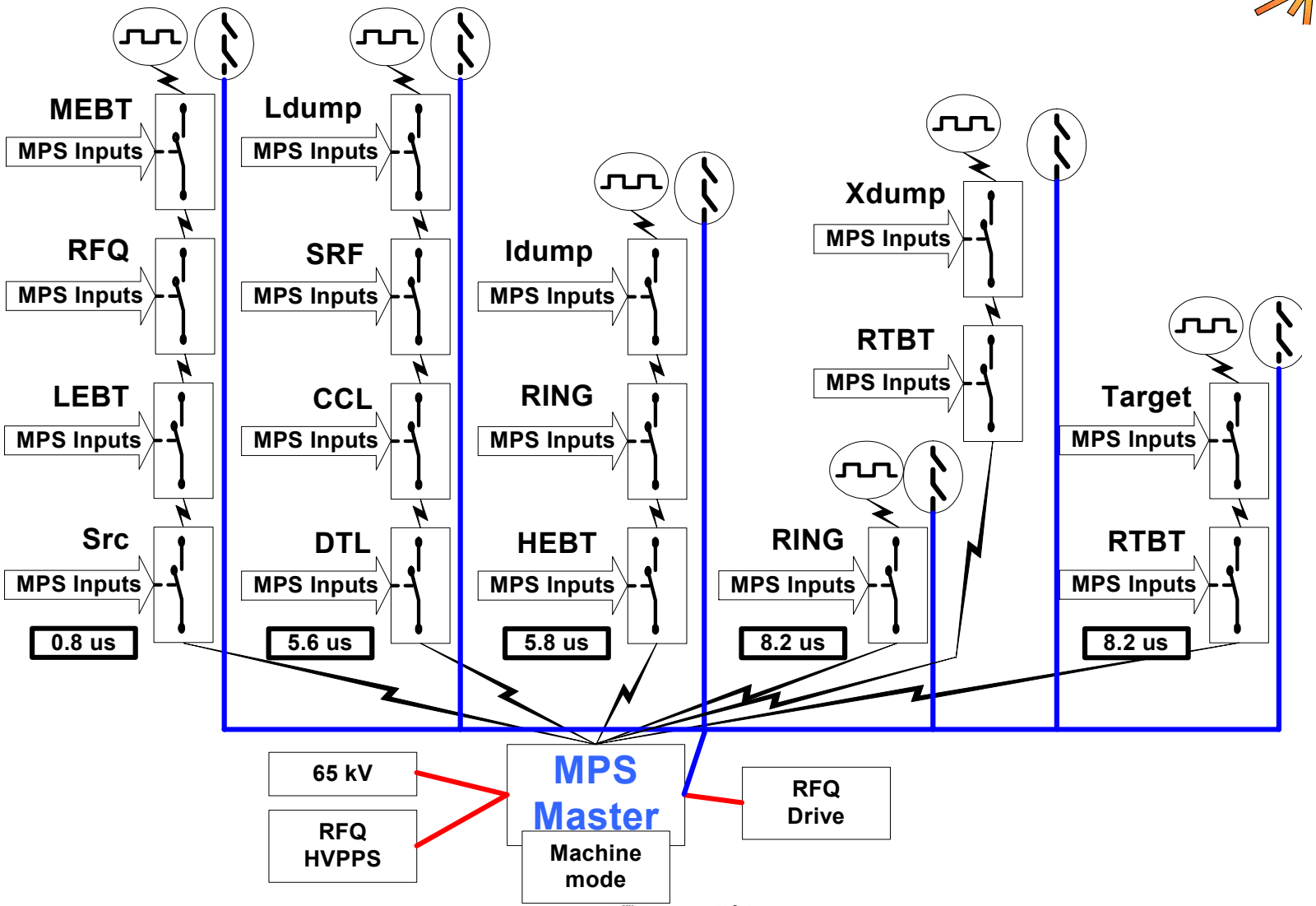

MPS Chains

- Inputs to an MPS Chassis can not cross machine modes
  - » Ion Source – Up to LEBT
  - » D-Plate – LEBT to end of Tank 1 (Commissioning mode only)
  - » L-Dmp – All Linac Devices to L-DMP, HEBT:DH11-OFF
  - » I-Dmp – All devices from HEBT:DH11 to I-DMP
    - – Ring devices INJSEPTM1, INJBND1-4
  - » Ring – All Ring Devices except devices included in Idmp, Extraction Septum off
  - » E-Dmp – All RTBT devices to RTBT_Mag:DCV13 and EDmp, RTBT_MAG:DH13 Off
  - » TGT All devices after RTBT_Mag:DCV13 to TGT

Latched (FPLS) verses Auto Reset (FPAR) MPS inputs

- Hardware is identical, DB's almost Identical
  - » FPAR has chatter fault option
- Altera FPGA code identical except for reset signal
  - » FPL Inputs require operator action to reset
  - » FPAR Inputs reset at Cycle_Start Event
- Latched uses RING_RF / 6 carrier frequency
- Auto-reset uses RING_RF / 2 carrier frequency
- MPS Inputs (will be) selected by jumpers
  - » 16/0, 8/8, 0/16 options available
- FPLS inhibits RFQ HV Power Supply, opens 65 kV switch
- FPAR inhibits LEBT Chopper, RFQ RF Drive

MPS Master

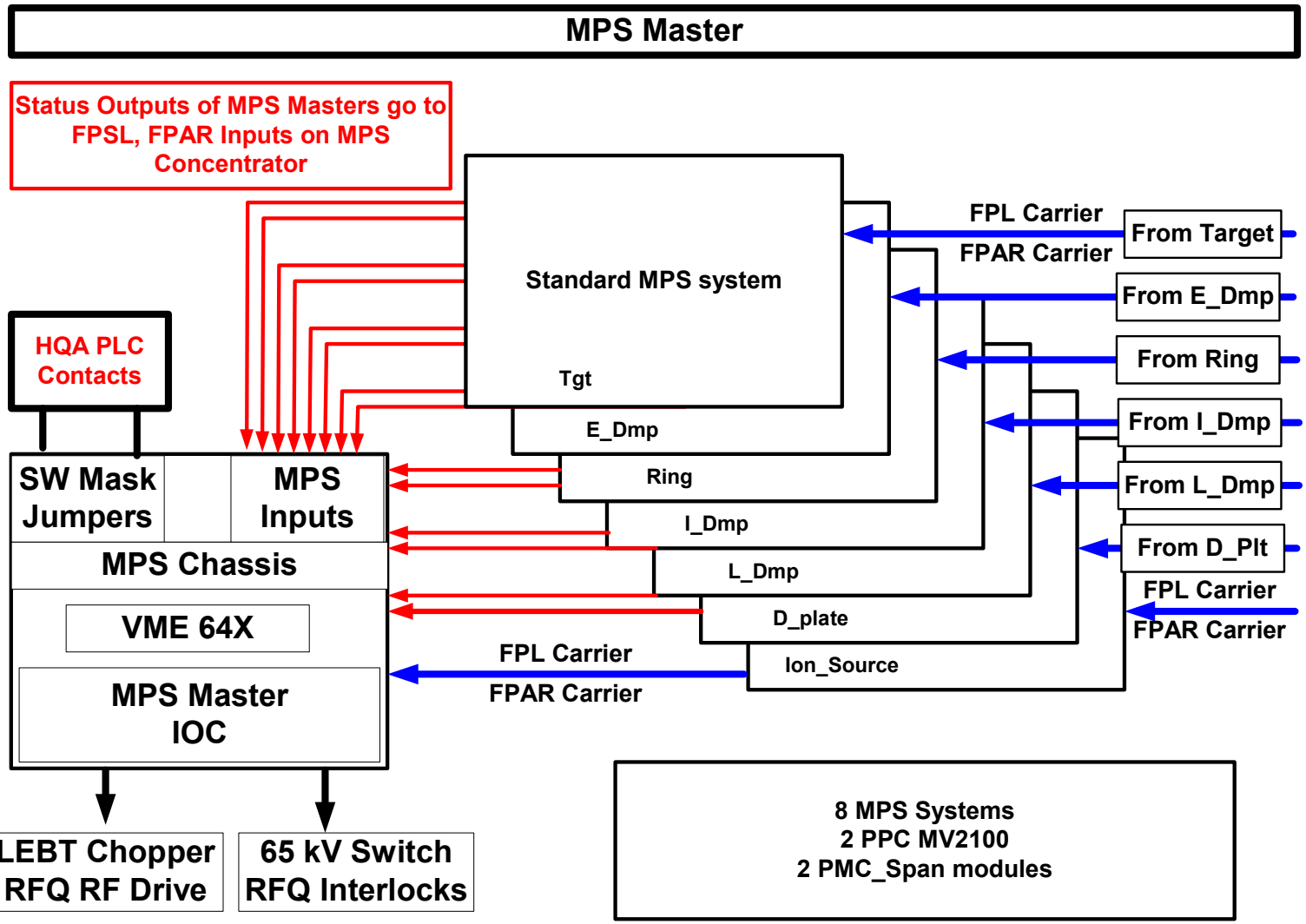
MPS Master
Status Outputs of MPS Masters go to FPSL, FPAR Inputs on MPS Concentrator
Standard MPS system
Tgt
E_Dmp
Ring
I_Dmp
L_Dmp
D_plate
Ion_Source
FPL Carrier
FPAR Carrier
From Target
From E_Dmp
From Ring
From I_Dmp
From L_Dmp
From D_Plt
FPL Carrier
FPAR Carrier
HQA PLC Contacts
SW Mask Jumpers
MPS Inputs
MPS Chassis
VME 64X
MPS Master IOC
FPL Carrier
FPAR Carrier
LEBT Chopper RFQ RF Drive
65 kV Switch RFQ Interlocks
8 MPS Systems
2 PPC MV2100
2 PMC_Span modules

MPS Interface Chassis

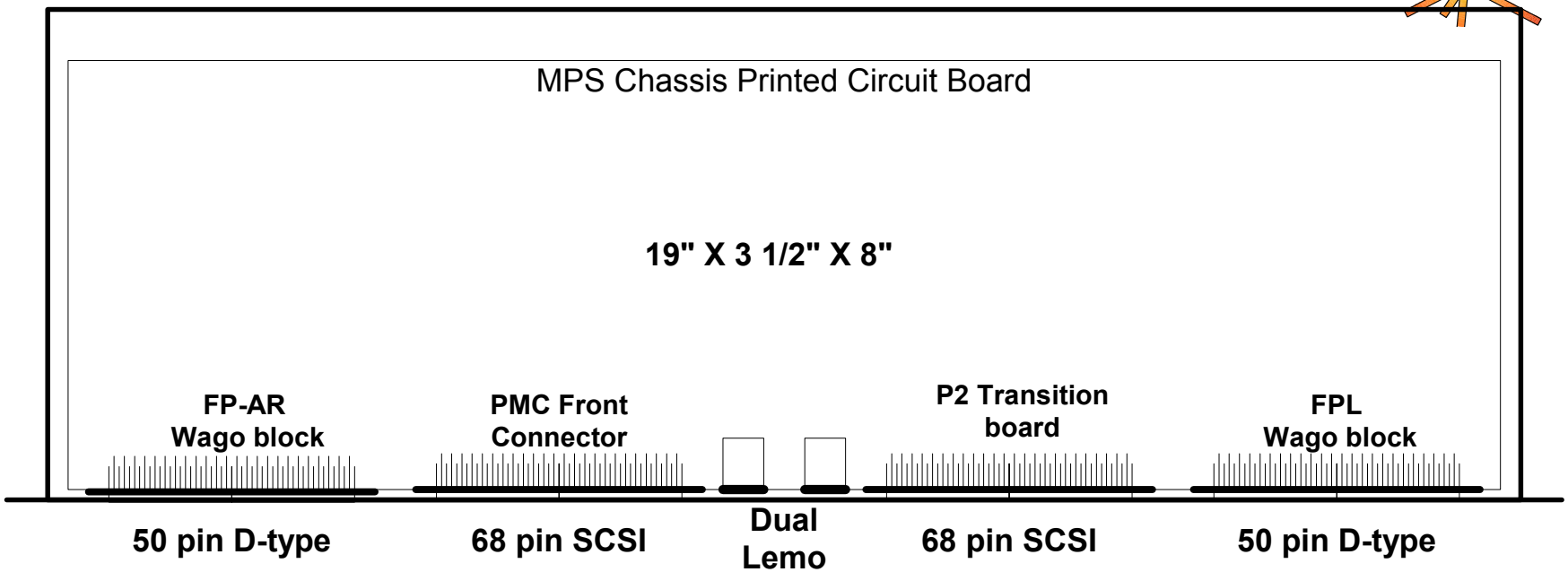

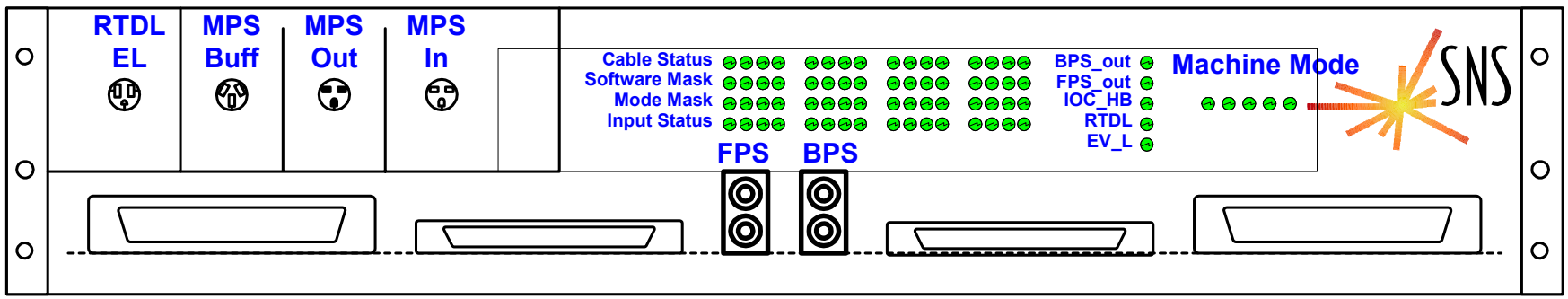

MPS Hardware (1 system)

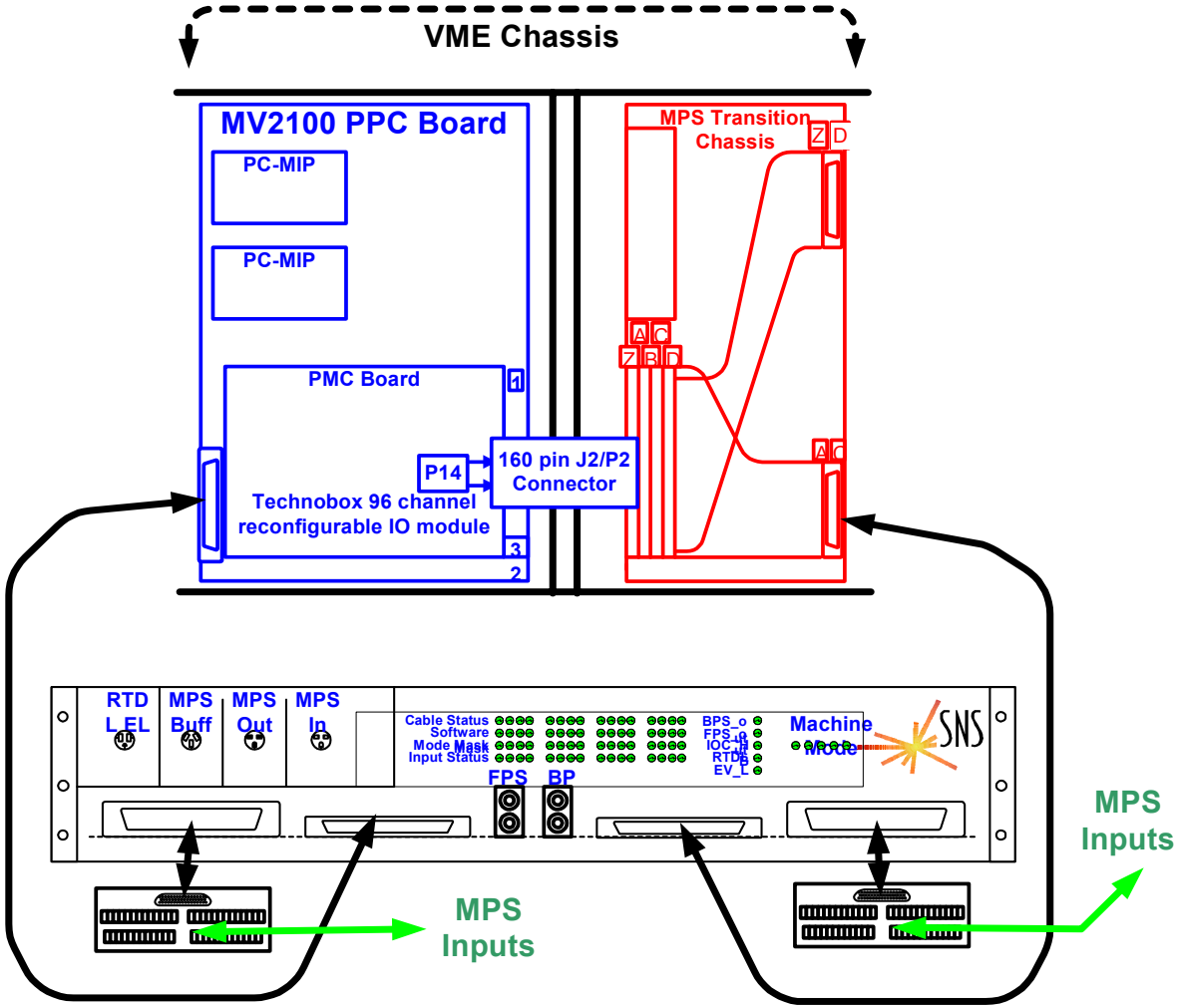

4 System Layout

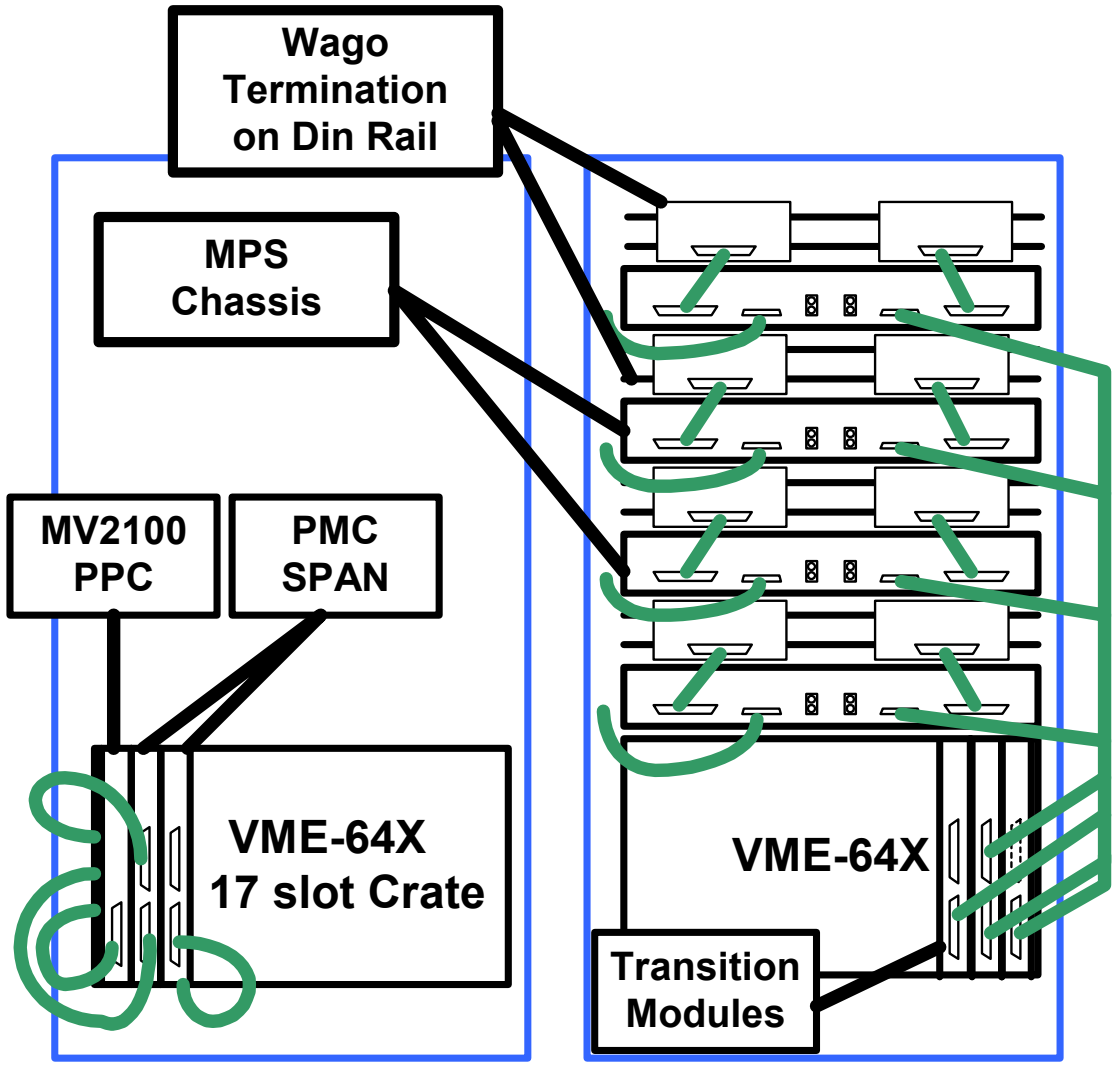

MPS Interface Chassis PCB

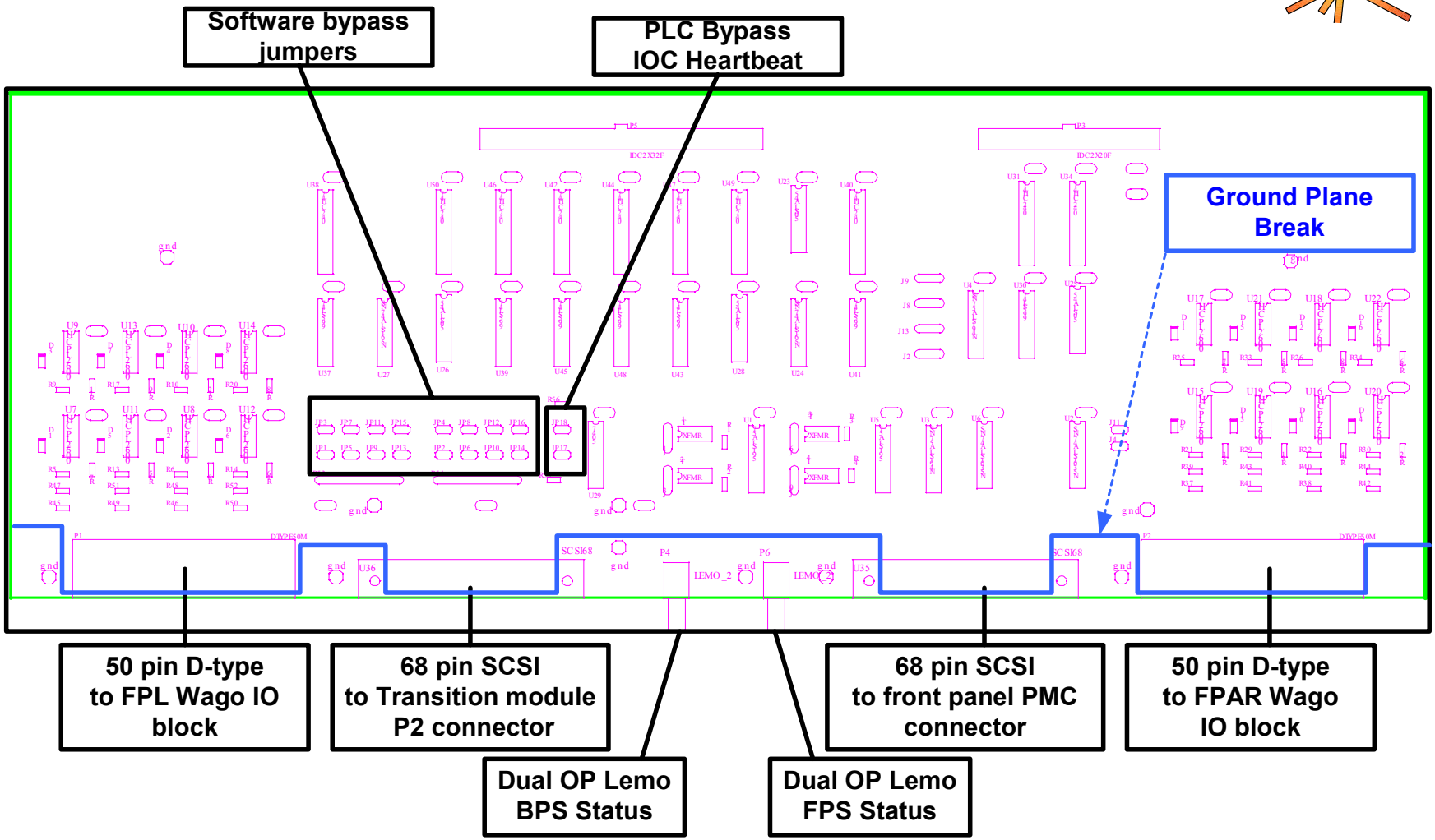

Proposed Hardware Configuration Control

- (Configuration Controls will be determined by committee)

- HQA – MPS
  - » Hardware locked in cabinets similar to PPS Hardware
- Fast Protect Latched
  - » Inputs covered by Lucite
- Fast Protect Latched
  - » Inputs covered by Lucite

- MPS System chassis, cables, etc will be color coded, color TBD.

MPS Software Status

- Software Reviews (Need to schedule)
  - » Run Permit System
  - » Driver / Database / SNL Programs
- BSP Work in progress (Dave Thompson, SNS)
  - » PCI_Autoconfig etc.
- Driver (Stan Brown, LANL) Code in progress
  - » Interrupts (Cycle Start)
    - – Read inputs (status, fault counters, etc)
    - – Touch Heartbeat register
    - – Inhibit beam for Chatter faults
    - – Verify Masks
    - – Verify Mode
    - – Set/reset masks as required

Device Support

- Record support required
  - » Long in
  - » AI
  - » AO
  - » BI
  - » BO
  - » MBBI
  - » MBBO
  - » String In
  - » Waveform (?) Mode Mask Arrays

MPS Hardware / Altera Code Status

- Register Read - Writes verified
- Fault Counters tested
- Interrupts through PCI bus verified
- PMC-Span (3 MPS Systems) verified
  - » Code Downloads
  - » Registers, etc.
- Event Link testing in progress (Simulated, needs hardware)
- RTDL simulated, needs hardware
- Carrier generators simulated, needs hardware
- MPS Chassis tested to PMC inputs
- Transition Module tested (AMAP)

MPS IOC Database (1 per MPS System)

- RPS, Eng./Tech Use
  - » RPS-MPS Configuration verification
  - » Version, date code register reads
  - » Consolidates Input status etc. (All I/P 1 display)
  - » Fault Times (Counter #'s)
  - » Input/Output carrier status
  - » RTDL / EVL status
  - » Modes (Event Link ,RTDL,Mode In use)
  - » MODE Masks in use
  - » Mode programming enable/disable register
  - » Heartbeat status, timeout value
  - » Jumper settings
  - » MPS Input Cable connection Status
  - » Interrupt enable/status
  - » Event Triggers (Diagnostics)

MPS Input signal DB (1 per MPS Input)

- Operator Displays, Controls
  - » Input Signal Testing
  - » Fault times (Time stamped)
  - » Input status, cable status
  - » Software mask enabling
  - » SW mask status
  - » Mode Mask Status
  - » Fault Resets
  - » Chatter fault parameters
  - » Channel Fault Input – (For CA, RPS, Alarms, Fault inputs)

  - » Input specific, I.e. BLM Trip Point

MPS Top Level Screen

Quick view for input faults, SW bypassed inputs, configuration faults, Machine Mode, PPS Status, # outstanding chatter faults, etc.

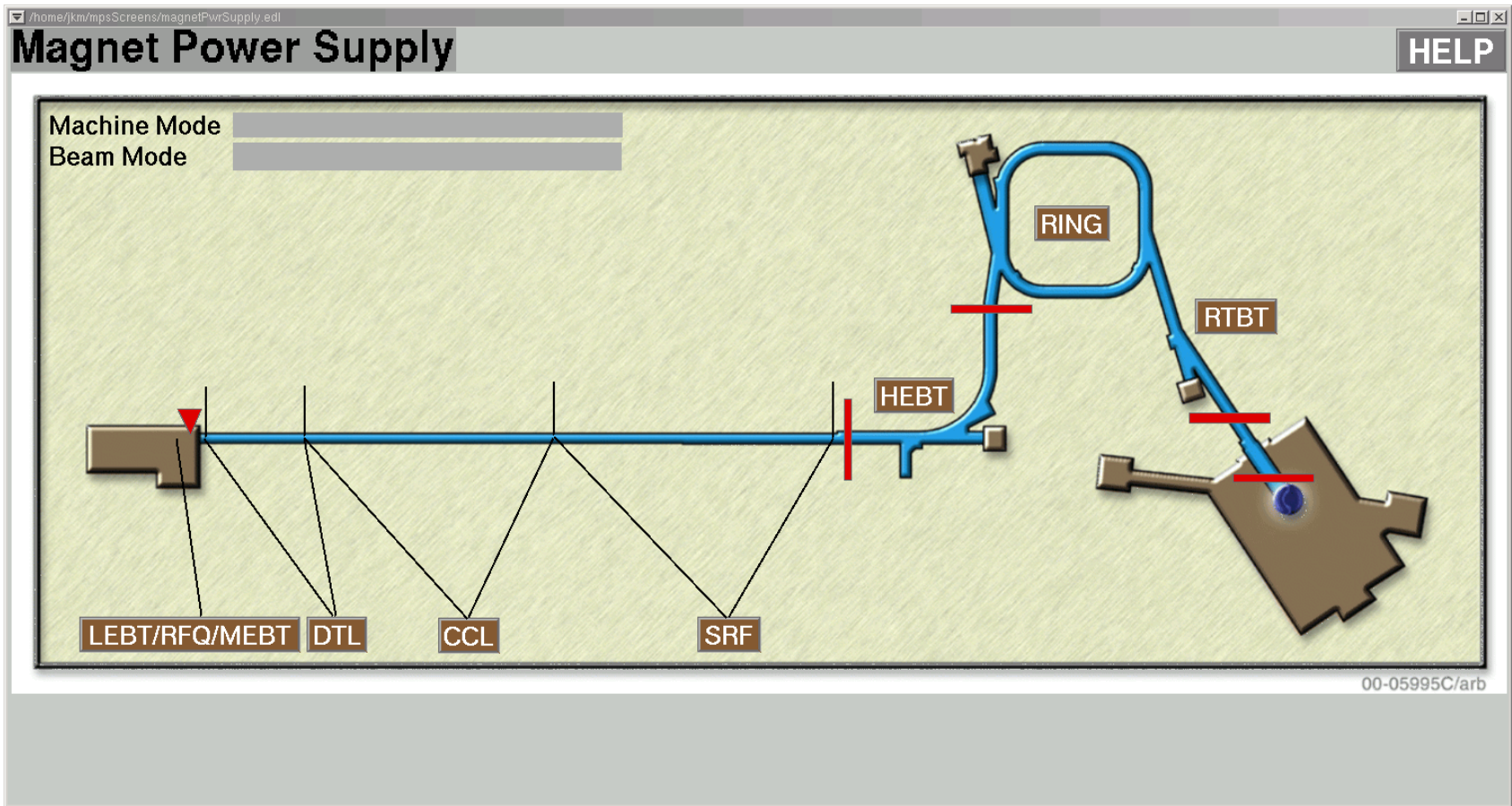

Run Permit System – Operator Interface

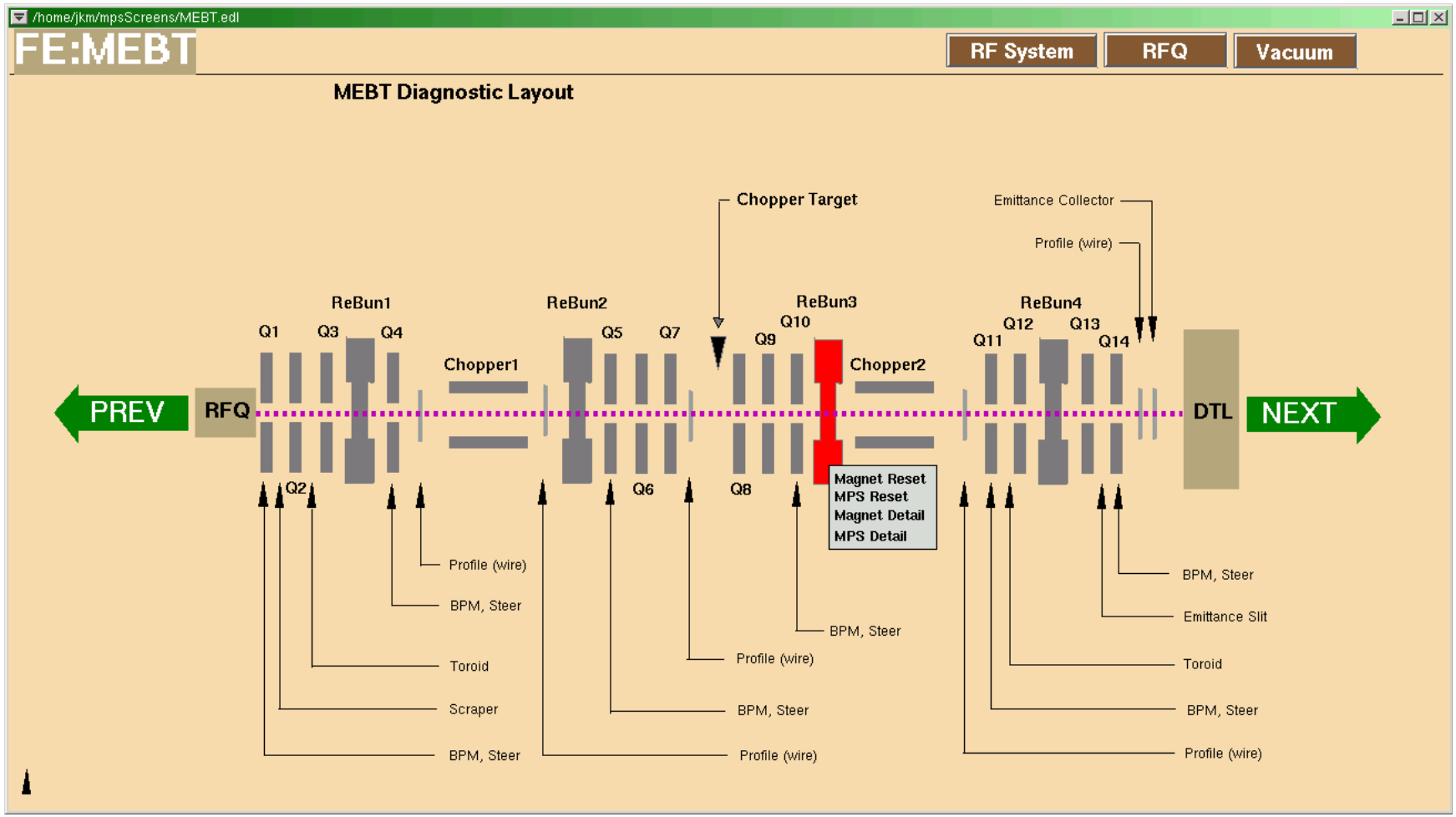

Beam and Loss Display (Diagnostics Grp, Dave Purcell)

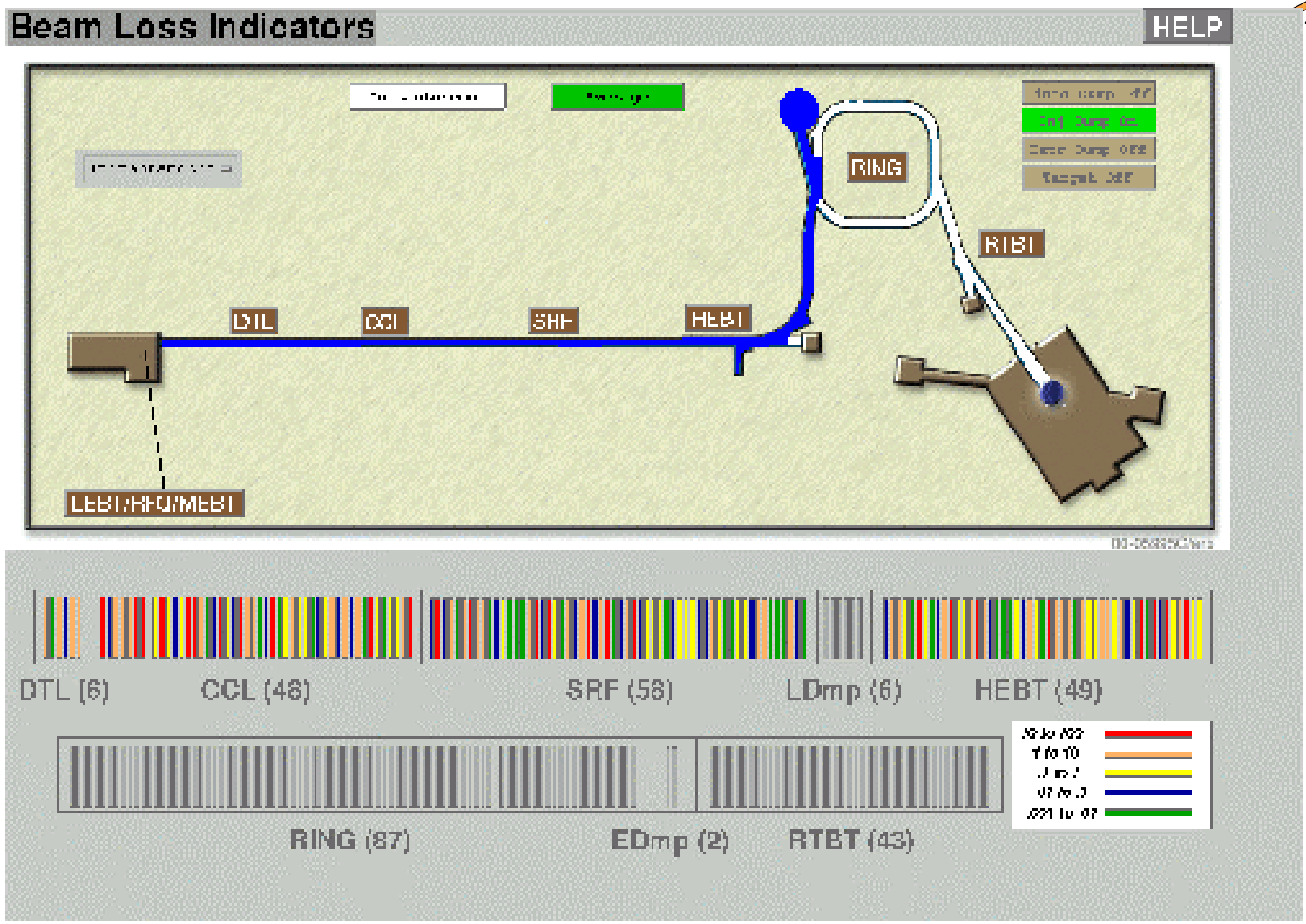

LINAC Dose Rate:

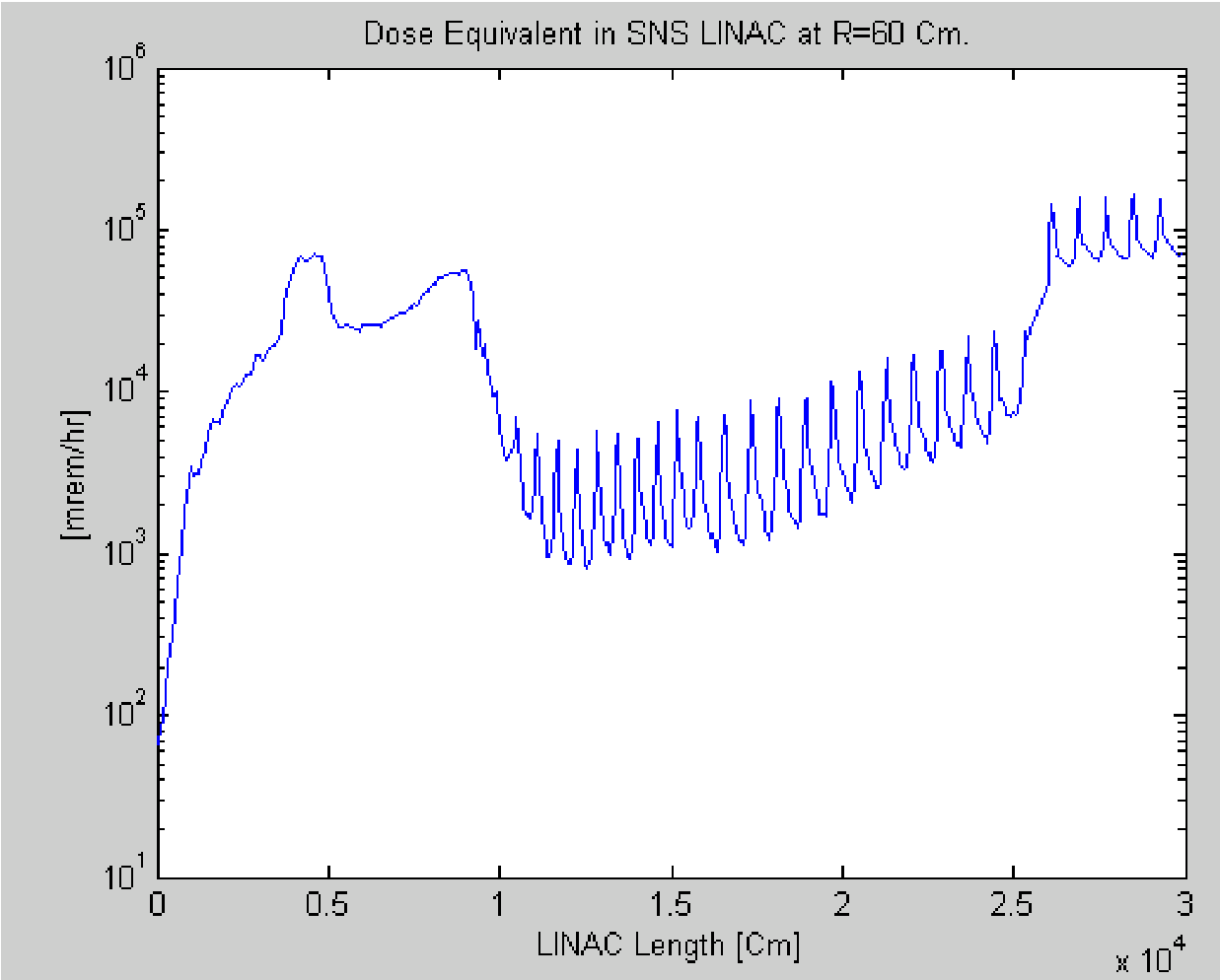

** Data is provided by Franz X Gallmeier.

LINAC Dose Rate (Simulated data) MATLAB display

(From Saeed Assadi's BLM Talk)

Distance along LINAC ➔

Time →

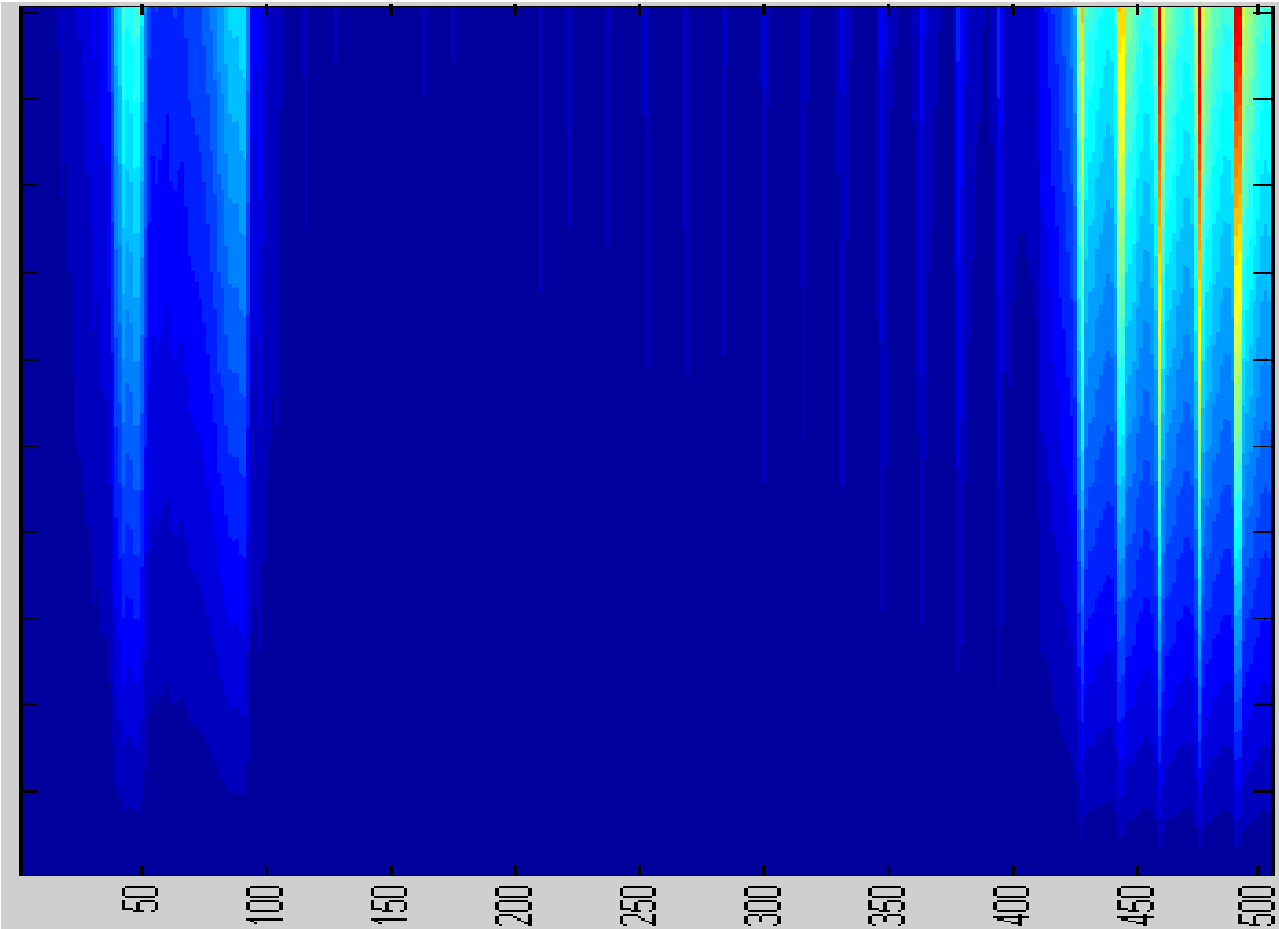

EPICS Database

EPICS SNL

- Global
  - » Machine Mode Status (Mode Changes)
  - » MPS Hardware Configuration (Jumpers, 16/0 vs 8/8, HB,etc)
  - » Checkout and MPS Validation
- Local (Each IOC)
  - » Mode Mask Verification
  - » Set point Verification
  - » Equipment Health (Sanity checks)
    - – (DAC Verses ADC)
    - – Voltage vs Current_readback * Load_Resistance
  - » Chatter faults (SNL or Interrupt routine?)
    - – Latch off after N faults in M cycles
  - » Checkout and MPS Validation

Run Permit (Timing) System Current Status

- Hardware
  - » RTDL:
    - – V105S & two V106S modules in house and checked out
  - » Event Link:
    - – V123S and V101S in house and checked out
    - – Still waiting for V124S
  - » Utility Module:
    - – Not available for front end testing
- Software
  - » RTDL: Software in house and checked out
  - » Event Link:
    - – V123/V101 Software in house and checked out
    - – V124S Software in ORNL CVS repository (not yet checked out)
  - » Timing Master Template: Currently in coding

Timing System for Front End Test

- RTDL Frames Provided:
  - » 1-3: Time stamp frames
  - » 5: Mode frame
  - » Note: Need to change jumpers on V106S boards
- Events Provided:
  - » 1: Cycle Start (6 Hz)
  - » 6: Mode (6 Hz)
  - » 39: Extract (6 Hz)
  - » 40: Diagnostics “On Demand” event
  - » 41: Diagnostics “1 Hz” event
  - » 42: Diagnostics “6 Hz” event
  - » 43: RTDL Transmit (6 Hz)
  - » 44: RTDL Valid (6 Hz)

Setting RTDL Frame Jumpers in V106S

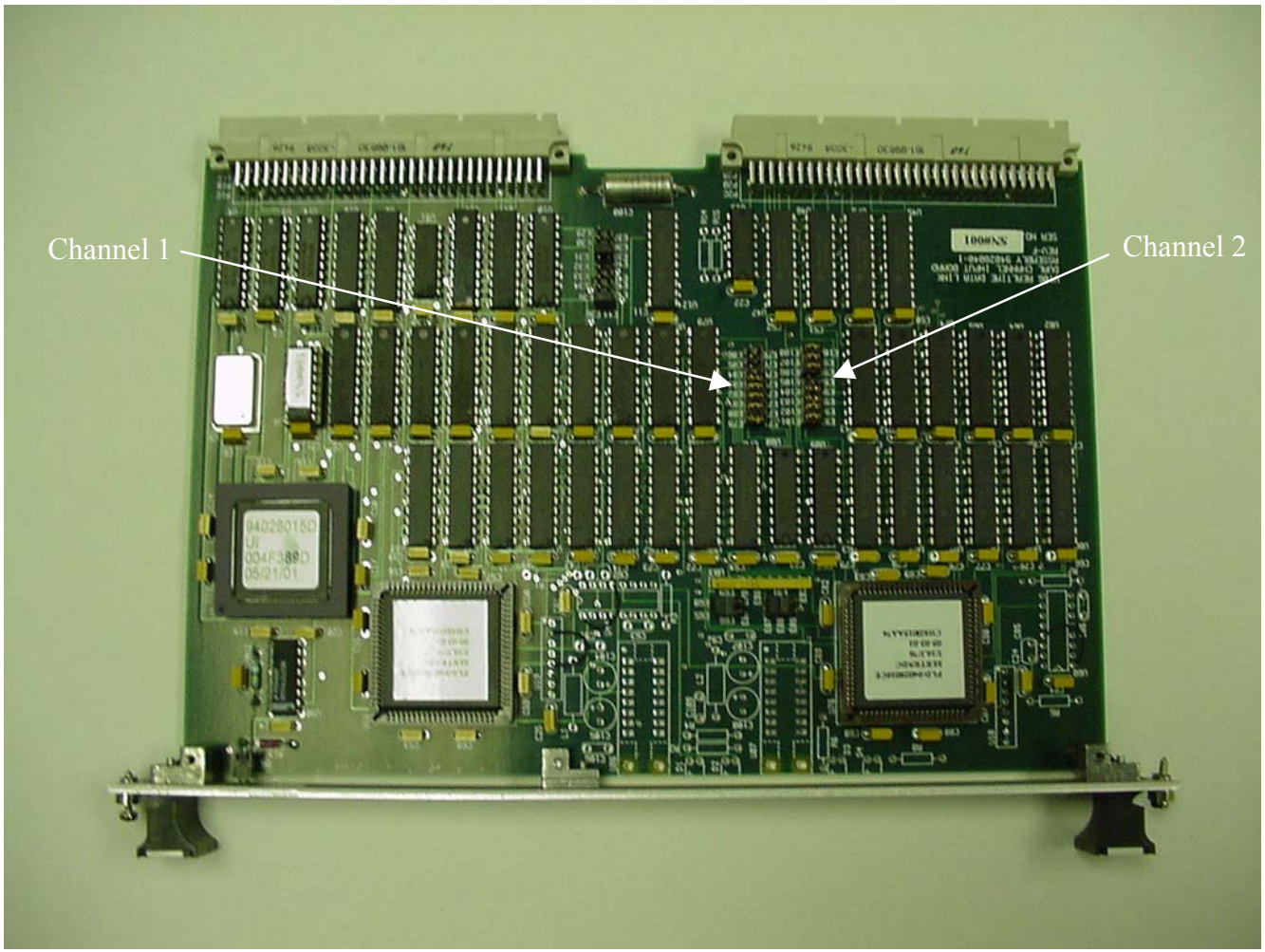

Other Requirements ???

- Related Applications
  - » Beam Loss Accounting System (BLAS)
    - – BLM integrated PV's (10e-4 levels)
    - – Vacuum levels (Neutral beam loss, gas stripping, calculations)
    - – Operator warning (Losses approach 10e-4 levels)
  - » Beam Current Accounting System (Inverse of BLAS)
    - – Compliments Loss Accounting System
    - – Logs integrated charge on target
    - – Fast loss accounting at low energies (Differential current monitors)